Analog-1.1.27

INDHIRESH S-EE25BTECH11027

March 25, 2026

Question

Consider the op-amp circuit shown.

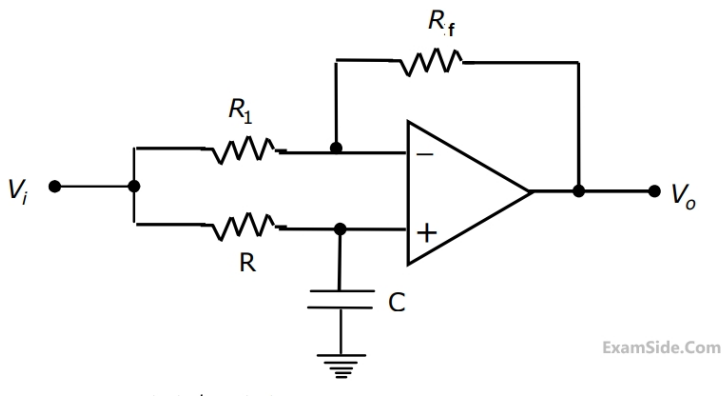

Figure: Op-amp circuit

1. The transfer function Vo(s)/Vi(s) is:

1) $\frac{1-sRC}{1+sRC}$ 2) $\frac{1+sRC}{1-sRC}$ 3) $\frac{1}{1-sRC}$ 4) $\frac{1}{1+sRC}$

2. If Vi = Vi sin(ωt) and Vo = Vo sin(ωt + ϕ), the minimum and maximum values of ϕ (in radians) are respectively:

1)-$\frac{\pi}{2}$ and $\frac{\pi}{2}$ 2)0 and $\frac{\pi}{2}$ 3) -π and 0 4)-$\frac{\pi}{2}$ and 0

Equivalent Circuit in s-domain

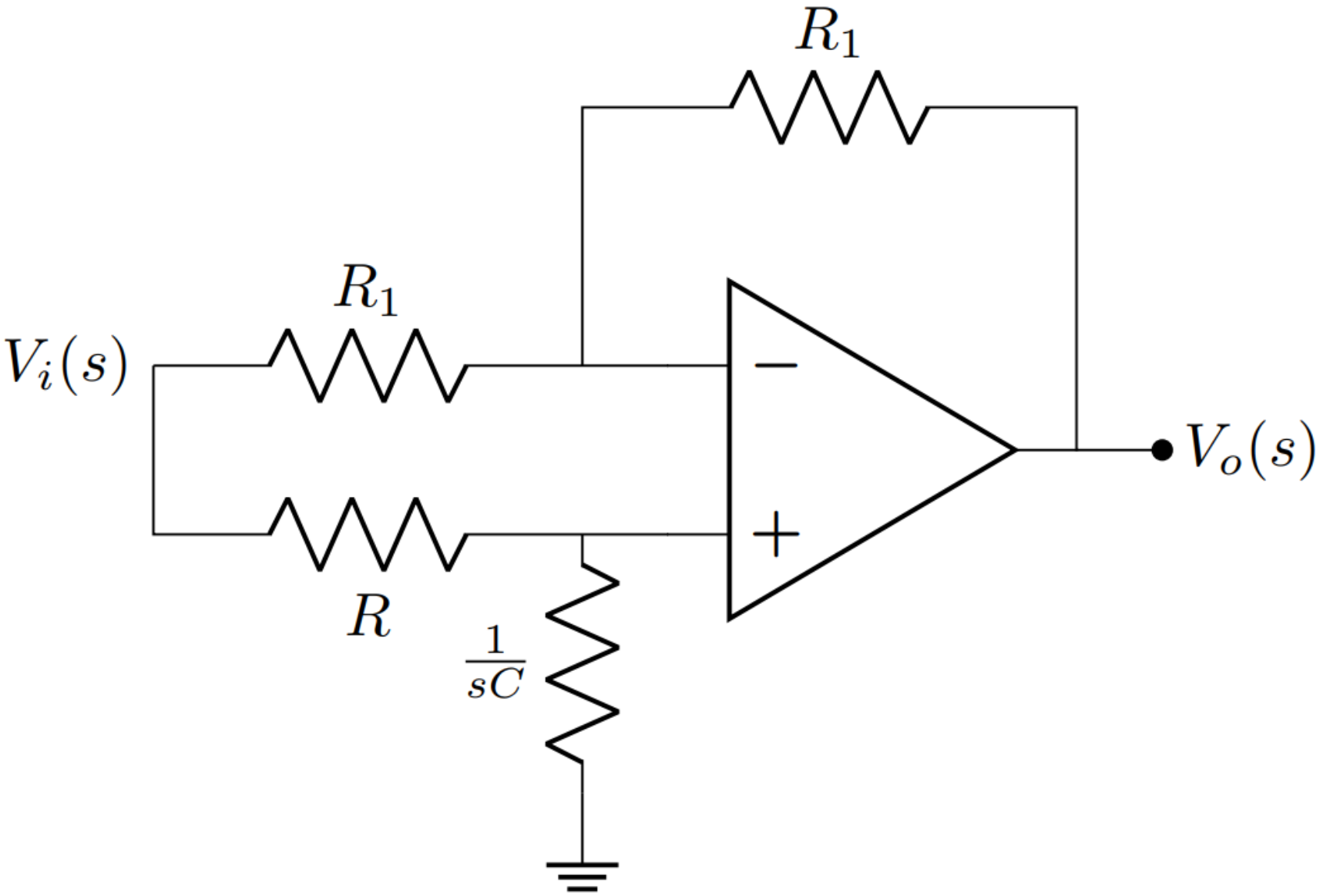

Analysis of the Non-Inverting Terminal

The input $v_i(t)$ is applied to the RC network connected to the non-inverting terminal (v_+).

Applying KCL at node v_+:

$$\frac{v_i(t) - v_+(t)}{R} = C\frac{dv_+(t)}{dt}$$

Rearranging to form a standard RC differential equation:

$$v_i(t) = RC\frac{dv_+(t)}{dt} + v_+(t) \tag{1}$$

Analysis of the Inverting Terminal

For an ideal op-amp, $v_- = v_+$. Applying KCL at the inverting terminal:

$$\frac{v_i(t) - v_+(t)}{R_1} + \frac{v_o(t) - v_+(t)}{R_1} = 0$$

Since the R_1 resistors are equal, they cancel out:

$$v_i(t) - v_+(t) + v_o(t) - v_+(t) = 0$$

Solving for $v_+(t)$:

$$v_+(t) = \frac{v_o(t) + v_i(t)}{2} \tag{2}$$

Combining the Results

Substitute Equation (2) into Equation (1):

$$v_i(t) = RC\frac{d}{dt}\left[\frac{v_o(t) + v_i(t)}{2}\right] + \frac{v_o(t) + v_i(t)}{2}$$

Multiply the entire equation by 2 to clear the fraction:

$$2v_i(t) = RC\frac{dv_o(t)}{dt} + RC\frac{dv_i(t)}{dt} + v_o(t) + v_i(t)$$

Group the input and output terms:

$$RC\frac{dv_o(t)}{dt} + v_o(t) = v_i(t) - RC\frac{dv_i(t)}{dt}$$

Final Differential Equation

The time-domain behavior of the first-order all-pass filter is governed by:

Final Result

$$RC\frac{dv_o(t)}{dt} + v_o(t) = v_i(t) - RC\frac{dv_i(t)}{dt}$$

Method 2: The Transform Domain Approach

If we already know the Transfer Function $H(s)$, we can derive the differential equation through the Inverse Laplace Transform.

The Transfer Function for this all-pass filter is:

$$H(s) = \frac{V_o(s)}{V_i(s)} = \frac{1 - sRC}{1 + sRC}$$

Cross-multiplying the terms gives:

$$V_o(s)(1 + sRC) = V_i(s)(1 - sRC)$$

Expanding both sides:

$$V_o(s) + sRCV_o(s) = V_i(s) - sRCV_i(s)$$

Applying Inverse Laplace Transform

Using the Laplace Transform property for differentiation:

$$\mathcal{L}\left\{\frac{dx(t)}{dt}\right\} = sX(s) - x(0^-)$$

Assuming zero initial conditions ($v_o(0) = 0$ and $v_i(0) = 0$), we apply the Inverse Transform $\mathcal{L}^{-1}$ to each term:

$$\mathcal{L}^{-1}\{V_o(s)\} + RC\mathcal{L}^{-1}\{sV_o(s)\} = \mathcal{L}^{-1}\{V_i(s)\} - RC\mathcal{L}^{-1}\{sV_i(s)\}$$

This directly yields the time-domain differential equation:

Differential Equation Representation

$$v_o(t) + RC\frac{dv_o(t)}{dt} = v_i(t) - RC\frac{dv_i(t)}{dt}$$

Finding h(t)-Method 1:The System Model

The first-order all-pass filter is governed by the differential equation:

$$RC\frac{dv_o(t)}{dt} + v_o(t) = v_i(t) - RC\frac{dv_i(t)}{dt}$$

To find the **Impulse Response** $h(t)$, we set the input $v_i(t) = \delta(t)$:

$$RC\frac{dh(t)}{dt} + h(t) = \delta(t) - RC\delta'(t) \tag{3}$$

where $\delta'(t)$ is the unit doublet (derivative of the delta function).

Integrating Factor Approach

Divide Eq. (3) by RC to get standard form:

$$\frac{dh(t)}{dt} + \frac{1}{RC}h(t) = \frac{1}{RC}\delta(t) - \delta'(t)$$

Multiply by the integrating factor $\mu(t) = e^{t/RC}$:

$$\frac{d}{dt}\left[e^{t/RC}h(t)\right] = e^{t/RC}\left(\frac{1}{RC}\delta(t) - \delta'(t)\right)$$

Integrating from 0^- to t:

$$e^{t/RC}h(t) = \int_{0^-}^{t} \frac{1}{RC}e^{\tau/RC}\delta(\tau)d\tau - \int_{0^-}^{t} e^{\tau/RC}\delta'(\tau)d\tau$$

Evaluating the Integrals

1. First Integral (Sifting Property):

$$\int_{0^-}^{t} \frac{1}{RC} e^{\tau/RC} \delta(\tau) d\tau = \frac{1}{RC} e^0 u(t) = \frac{1}{RC} u(t)$$

2. Second Integral (Doublet Property): Using $\int f(t)\delta'(t)dt = f(t)\delta(t) - \int f'(t)\delta(t)dt$:

$$\int_{0^-}^{t} e^{\tau/RC} \delta'(\tau) d\tau = [e^0 \delta(t)] - \int \frac{1}{RC} e^{\tau/RC} \delta(\tau) d\tau = \delta(t) - \frac{1}{RC} u(t)$$

Combining:

$$e^{t/RC} h(t) = \frac{1}{RC} u(t) - \left(\delta(t) - \frac{1}{RC} u(t) \right) = \frac{2}{RC} u(t) - \delta(t)$$

Final Expression

Multiplying through by $e^{-t/RC}$:

Impulse Response $h(t)$

$$h(t) = -\delta(t) + \frac{2}{RC} e^{-\frac{t}{RC}} u(t)$$

Method 2: Inverse Laplace Transform

We know that the transfer function is

$$H(s) = \frac{1 - sRC}{1 + sRC}$$

We manipulate $H(s)$ to fit standard Laplace Table forms:

$$H(s) = \frac{-(sRC + 1) + 2}{sRC + 1} = -1 + \frac{2}{sRC + 1}$$

Factor out RC from the denominator:

$$H(s) = -1 + \left(\frac{2}{RC}\right) \frac{1}{s + \frac{1}{RC}}$$

Apply $\mathcal{L}^{-1}$:

$$h(t) = \mathcal{L}^{-1}\{-1\} + \frac{2}{RC}\mathcal{L}^{-1}\left\{\frac{1}{s + \frac{1}{RC}}\right\}$$

Final Verification

Using the standard transform pairs:

- $\mathcal{L}^{-1}\{1\} = \delta(t)$
- $\mathcal{L}^{-1}\{\frac{1}{s+a}\} = e^{-at}u(t)$

Result Consistency

$$h(t) = -\delta(t) + \frac{2}{RC}e^{-\frac{t}{RC}}u(t)$$

Both methods yield the same expression, confirming the mathematical model of the all-pass filter.

Max and min phase-The Starting Point

The time-domain relationship for the all-pass filter is:

$$RC\frac{dv_o(t)}{dt} + v_o(t) = v_i(t) - RC\frac{dv_i(t)}{dt} \tag{4}$$

For a sinusoidal input $v_i(t) = V_i \sin(\omega t)$, we seek the steady-state output:

$$v_o(t) = V_o \sin(\omega t + \phi)$$

To solve for the phase shift ϕ, we assume a solution of the form:

Assumed Form

$$v_o(t) = A\sin(\omega t) + B\cos(\omega t)$$

Substitution into the Differential Equation

Differentiating our assumed solution:

$$\frac{dv_o(t)}{dt} = \omega A \cos(\omega t) - \omega B \sin(\omega t)$$

Substitute $v_o, \dot{v}_o, v_i$, and $\dot{v}_i$ into Eq. (4):

$$RC(\omega A \cos \omega t - \omega B \sin \omega t) + (A \sin \omega t + B \cos \omega t) = V_i \sin \omega t - RC(\omega V_i \cos \omega t)$$

Grouping Sine and Cosine Terms

To satisfy the equation for all t, the coefficients of $\sin(\omega t)$ and $\cos(\omega t)$ must match on both sides.

1. **Sine Coefficients:**

$$A - \omega RCB = V_i$$

2. **Cosine Coefficients:**

$$B + \omega RCA = -\omega RCV_i$$

Solving this system for A and B:

$$A = V_i \frac{1 - (\omega RC)^2}{1 + (\omega RC)^2}, \quad B = V_i \frac{-2\omega RC}{1 + (\omega RC)^2}$$

Extracting the Phase ϕ

A signal of the form $v_o(t) = A\sin(\omega t) + B\cos(\omega t)$ has a phase shift:

$$\phi = \tan^{-1}\left(\frac{B}{A}\right)$$

Substituting our results for A and B:

$$\phi = \tan^{-1}\left(\frac{-2\omega RC}{1-(\omega RC)^2}\right)$$

Using the identity $\tan(2\theta) = \frac{2\tan\theta}{1-\tan^2\theta}$, where $\tan\theta = \omega RC$:

Phase Expression

$$\phi(\omega) = -2\tan^{-1}(\omega RC)$$

Final Answer: Phase Limits

We analyze the behavior of $\phi(\omega)$ across the frequency spectrum:

- **At DC ($\omega \to 0$):**
$$\phi \to -2\tan^{-1}(0) = \mathbf{0} \text{ rad}$$
- **At Infinite Frequency ($\omega \to \infty$):**
$$\phi \to -2\tan^{-1}(\infty) = -2\left(\frac{\pi}{2}\right) = -\pi \text{ rad}$$

Solution

The phase ranges from $-\pi$ **to** 0. This matches **Option (iii)**.

Python Code for Plot

```
import numpy as np
import matplotlib.pyplot as plt

R = 1000
C = 1e-6
RC = R * C

# 1. Create the time vector
t = np.linspace(-0.001, 0.005, 1000)
dt = t[1] - t[0] # Time step size

# 2. Define the Step Function u(t)
u = np.where(t >= 0, 1, 0)
```

Python Code for Plot

```
# 4. Define the Delta Function numerically
delta = np.zeros_like(t)
delta[np.abs(t).argmin()] = 1/dt

# 5. Combine into the final h(t)
h_final = -delta + h_continuous

# Plotting
plt.figure(figsize=(9, 6))
plt.plot(t, h_final, label=' $h(t)$ Calculation',
    color='blue', lw=2)

# Aesthetics
plt.axhline(0, color='black', lw=1)
plt.axvline(0, color='black', lw=1)
```

Python Code for Plot

```
plt.ylim(-1000, 2500) # Zoom in to see the
    behavior clearly
plt.title(r' Time-Domain Plot of $h(t) = -\delta(
    t) + \frac{2}{RC}e^{-t/RC}u(t)$')
plt.xlabel('Time (s)')
plt.ylabel('Amplitude')
plt.grid(True, linestyle=':', alpha=0.6)
plt.legend()
plt.show()
```

Python plot

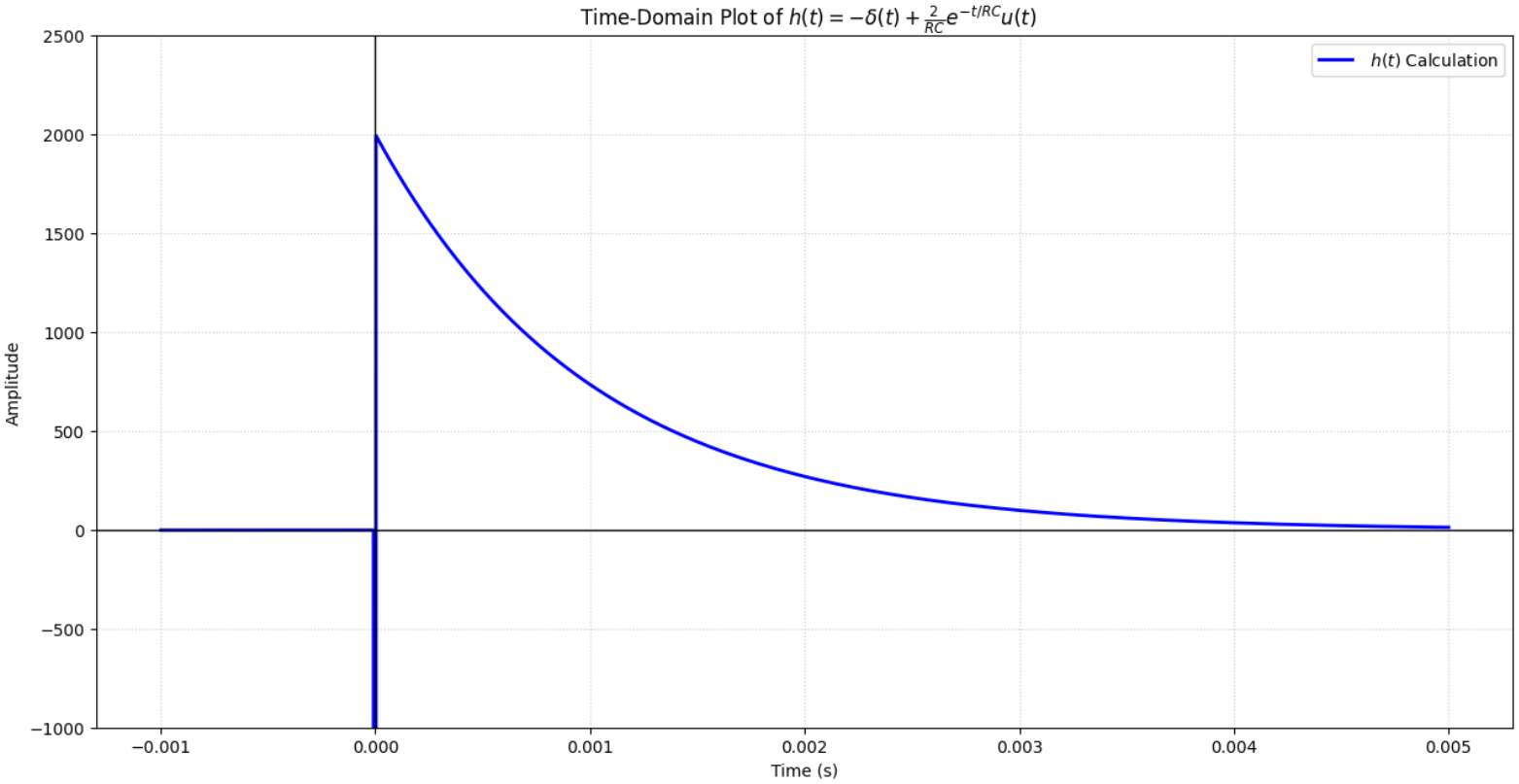

Figure: Plot